C.I.P.	9 mm Browning court Country of Origin: BE	TAB.	IV
		Date	84-06-14
		Revision	08-09-23

Alternative Names: 9mm Browning Kurz (short, corto), 9 mm kurz, 380 ACP, 380 Auto(matic)

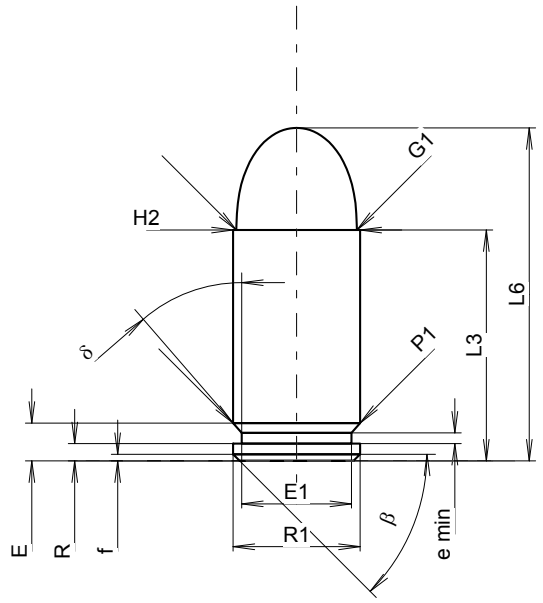

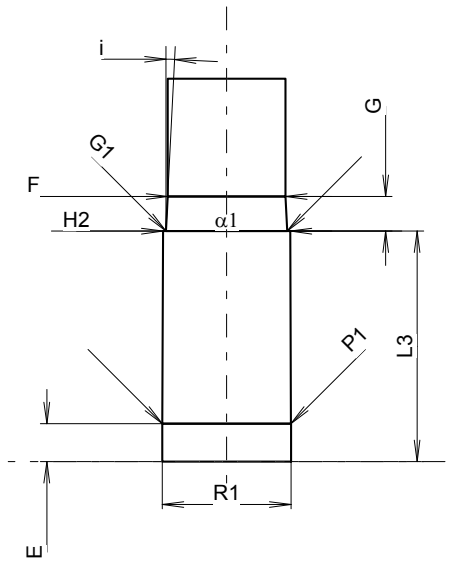

Scale 1.76:1

CARTRIDGE MAXI

Lengths

L1	=		
L2	=		
L3 1)	=	17.33	-0.25
L4	=		
L5	=		
L6	=	25.00	

Case Head

R	=	1.30
R1	=	9.53
R3	=	
E	=	2.84
E1	=	8.25
e min	=	0.80
δ	=	40°
f	=	0.50
β	=	45°

Powder Chamber

P1	=	9.53
P2	=	

Junction Cone

α	=	
S	=	
r1 min	=	
r2	=	

Collar

H1	=	
H2 1)	=	9.53

Projectile

G1 1)	=	9.04
G2	=	
F	=	
L3+G 1)	=	19.93

Pressures (Energies)
Method Transducer

Pmax	=	1350	bar
PK	=	1553	bar
PE	=	1755	bar
M	=	9.00	

Miscellaneous Dimensions

Fe 1)6)	=	0.30
delta L	=	

CHAMBER MINI

Lengths

L1	=	
L2	=	
L3 1)	=	17.30

Breech

R	=	
R1	=	9.66
R2	=	
R3	=	
r	=	

Powder Chamber

E	=	2.84
P1 1)	=	9.65
P2	=	

Junction Cone

α	=	
S	=	
r1 max	=	
r2	=	

Collar

H1	=	
H2 1)	=	9.55

Commencement of Rifling

G1 1)*	=	9.10
G 1)*	=	2.60
α1	=	180°
h	=	
s	=	
i 1)	=	2°51'45"
w	=	

Barrel

F 1)*	=	8.84
Z 1)	=	9.04

Grooves

b	=	3.07	
N	=	6	
u	=	250.00	
Q	=	63.26	mm²

Dimensions in << mm >>
Dimensions and Tolerances for Proof Barrels
see Appendix CR 1.

Notes:
1) Check for safety reasons
6) Headspace on Case Mouth
* Basic dimensions